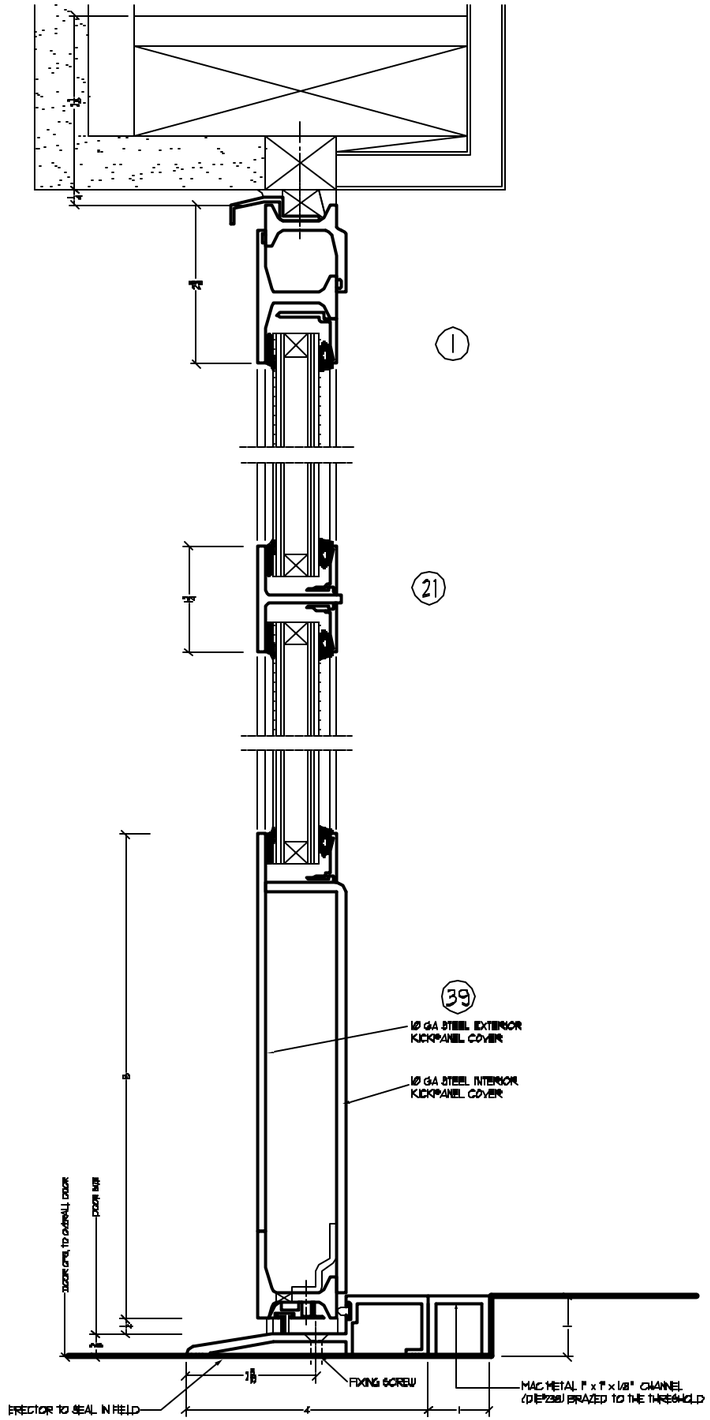
1
21
39
16 GA STEEL EXTERIOR KICKPANEL COVER
16 GA STEEL INTERIOR KICKPANEL COVER
DOOR OPEN TO OVERALL DOOR
DOOR SIZE
FIXING SCREW
MAC METAL 1" x 1" x 1/8" CHANNEL (DIE2381) BRAZED TO THE THRESHOLD
ERECTOR TO SEAL IN FIELD

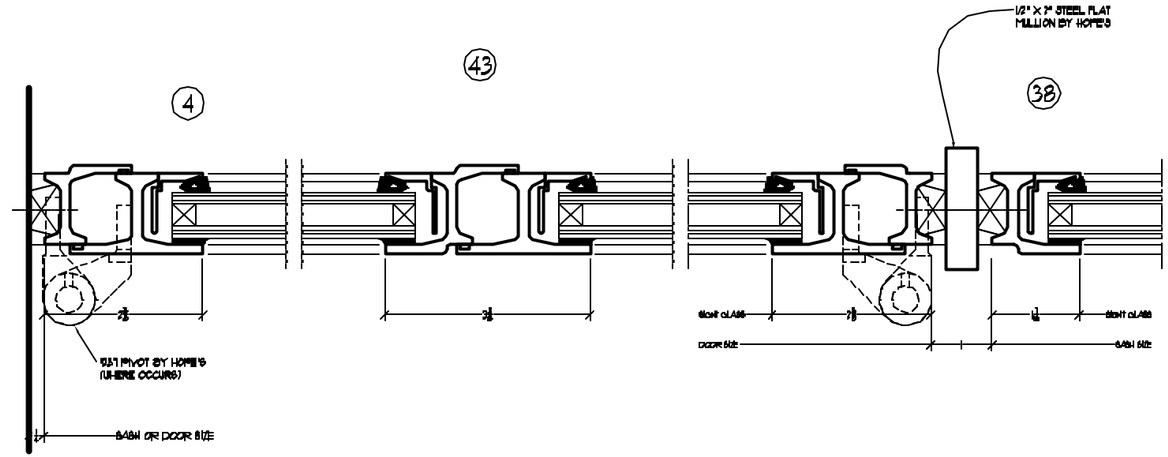
43
4
38
1/2" x 1" STEEL FLAT MULLION BY HOPE'S
TILT PIVOT BY HOPE'S (WHERE OCCURS)
SASH OR DOOR SIZE
SIGHT GLASS
DOOR SIZE
SASH SIZE

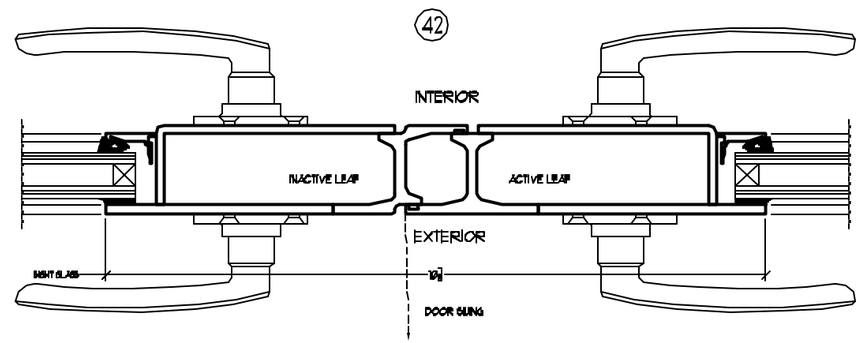
42
INTERIOR
INACTIVE LEAF
ACTIVE LEAF
EXTERIOR
SIGHT GLASS
DOOR SWING

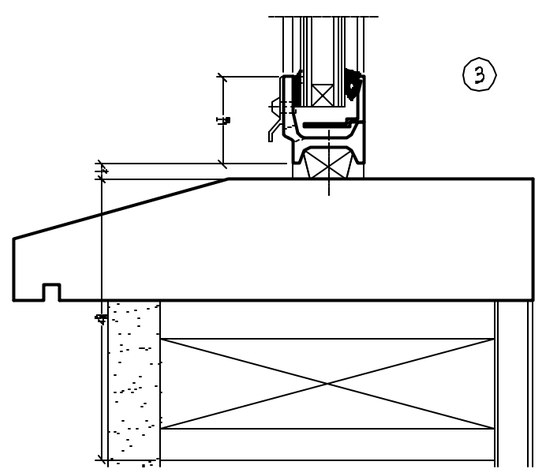
3